# DESI
# Bond Stress Calculations
## Sylgard 184

P. Perry
PEPerry@lbl.gov
6 June 2013

# Summary

- Purpose
  - Model heritage programs to compare DESI
  - High Δα Optics bonded with Sylgard 184
  - Mixed success in practice
- Results
  - No clear safe stress/strain level identified
  - DESI NOT in the extreme risk zone
  - Testing required to validate specific DESI design
- General Notes on Sylgard 184 Joints
  - Failures occur cold
  - Thicker bonds are better
  - Primer not used on optics
  - Failure stresses below published material strength

# Missions Modeled

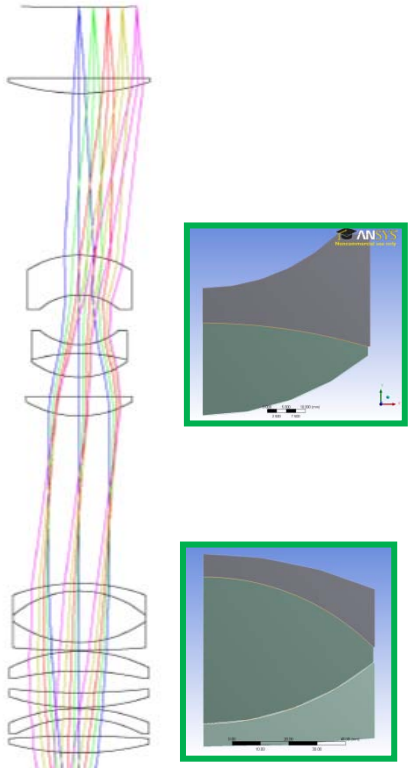

OSMOS

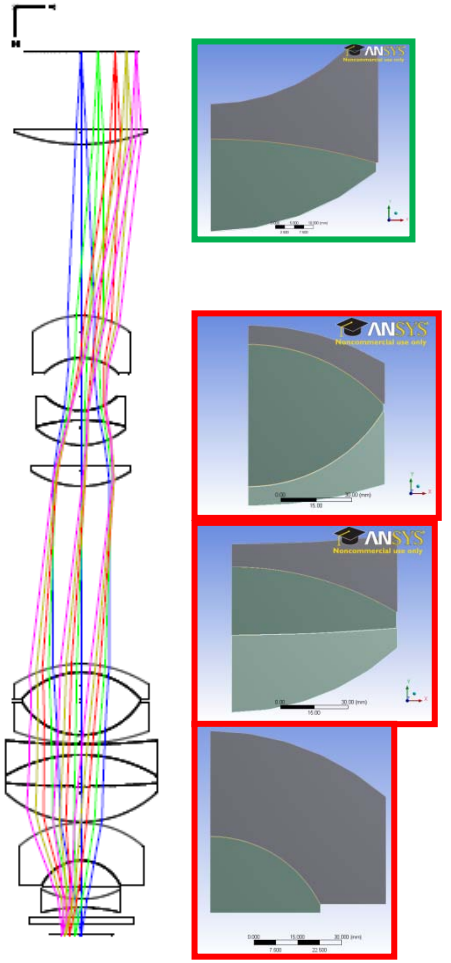

K/COSMOS

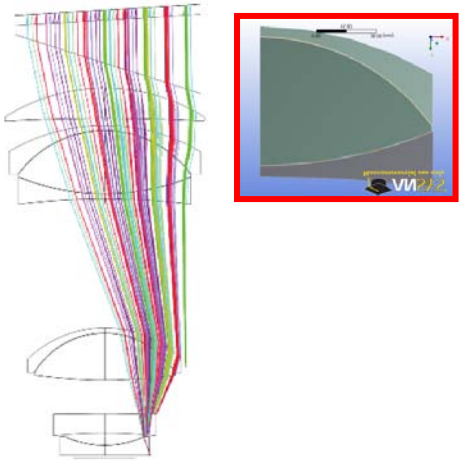

BOSS Blue

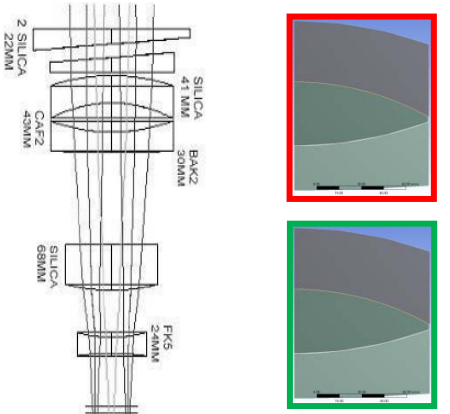


SOAR

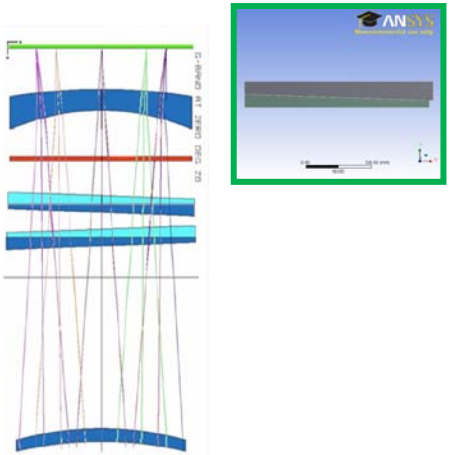

ODI ADC

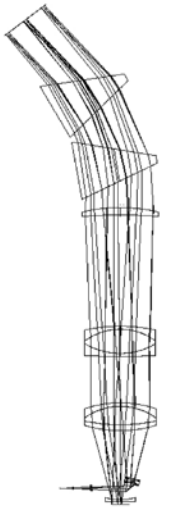

MIKE Blue

# Summary

| Instrument | Lens | Glass | Bond | Δ CTE | ROC/SD | Δ Temp |
|---|---|---|---|---|---|---|
| [-] | [-] | [-] | [mm] | [με/˚c] | [-] | [˚c] |
| OSMOS | Col Doublet | BAL15Y/CaF2 | 0.100 | 11.1 | 3.54 | |
| | Cam Triplet | BSM51Y/CaF2 | 0.100 | 12.4 | 1.41 | -37 |
| | | CaF2/BSM51Y | 0.100 | 12.4 | 1.56 | |
| KOSMOS | Col Doublet | BAL15Y/CaF2 | 0.100 | 11.1 | 3.54 | |
| | Cam Triplet 1 | BSM51Y/CaF2 | 0.100 | 12.4 | 1.28 | |
| | | CaF2/BAL35Y | 0.100 | 13 | 1.18 | -42 |
| | Cam Triplet 2 | BAL35Y/CaF2 | 0.100 | 13 | 1.97 | |
| | | CaF2/BSM51Y | 0.100 | 12.4 | 11.92 | |
| | Cam Doublet | BSM51Y/CaF2 | 0.100 | 12.4 | 1.12 | |
| KOSMOS THK | Cam Triplet 1 | BSM51Y/CaF2 | **0.200** | 12.4 | 1.28 | |
| | | CaF2/BAL35Y | **0.200** | 13 | 1.18 | -42 |
| | Cam Triplet 2 | BAL35Y/CaF2 | **0.200** | 13 | 1.97 | |
| | | CaF2/BSM51Y | **0.200** | 12.4 | 11.92 | |
| | Cam Doublet | BSM51Y/CaF2 | **0.200** | 12.4 | 1.12 | |
| KOSMOS THK-CLD | Cam Triplet 1 | BSM51Y/CaF2 | 0.200 | 12.4 | 1.28 | |
| | | CaF2/BAL35Y | 0.200 | 13 | 1.18 | **-35** |
| | Cam Triplet 2 | BAL35Y/CaF2 | 0.200 | 13 | 1.97 | |
| | | CaF2/BSM51Y | 0.200 | 12.4 | 11.92 | |
| | Cam Doublet | BSM51Y/CaF2 | 0.200 | 12.4 | 1.12 | |
| DESI | Blue Triplet | CaF2/N-BAK2 | 0.250 | 10.7 | 2.92 | |
| | | N-BAK2/CaF2 | 0.250 | 10.7 | 1.48 | -42 |
| | Red Triplet | CaF2/S-BAH28 | 0.250 | 12.1 | 3.02 | |
| | | S-BAH28/S-LAL12 | 0.250 | 0.6 | 2.02 | |
| BOSS | Blue Triplet | LAL7/CaF2 | 0.250 | 12 | 1.23 | -14 |
| | | CaF2/N-SK2HT | 0.250 | 12.7 | 2.64 | |
| ODI | ADC Pair | FS/PBL6Y | 0.127 | 7.8 | inf | -10 |
| SOAR SOI | SOI Triplet | SiO2/CaF2 | 0.160 | 18.18 | 2.06 | -35 |
| | | CaF2/BAK2 | 0.160 | 10.7 | 2.89 | |
| SOAR SOI CLD | SOI Triplet | SiO2/CaF2 | 0.160 | 18.18 | 4.11 | -27 |
| | | CaF2/BAK2 | 0.160 | 10.7 | 5.78 | |
| Program Unk -20c | Triplet | | 0.092 | 4.1 | 7.68 | -45 |
| | | | 0.092 | 3.4 | 1.36 | |
| Program Unk -10c | Triplet | | 0.092 | 4.1 | 7.68 | -35 |
| | | | 0.092 | 3.4 | 1.36 | |
| Program Unk THK | Triplet | | 0.200 | 4.1 | 7.68 | -51 |
| | | | 0.200 | 3.4 | 1.36 | |

| Bond Property | Value |
|---|---|
| E | 2.4 MPa |
| v | 0.499 |
| CTE | 310 με/˚C |

# Typical FE Model

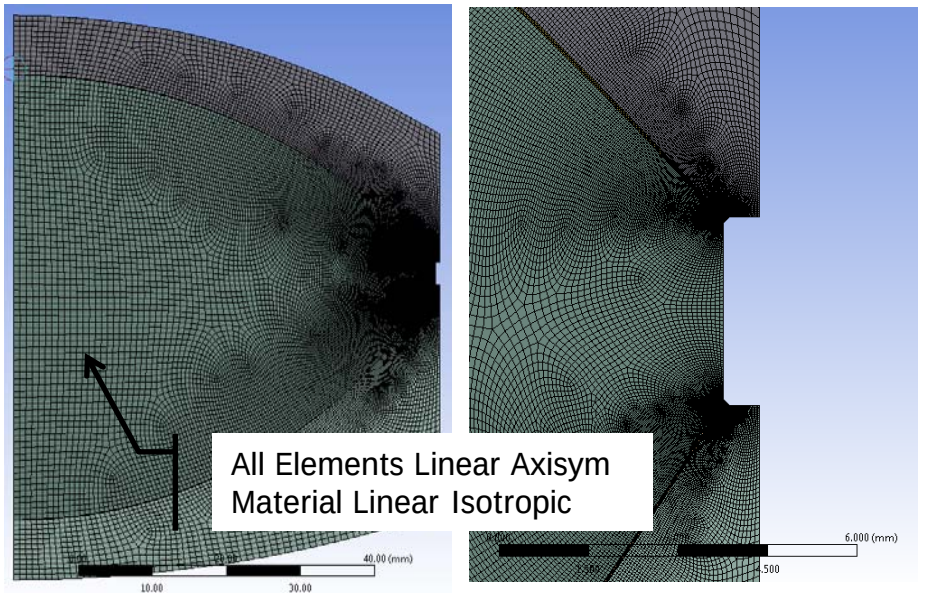


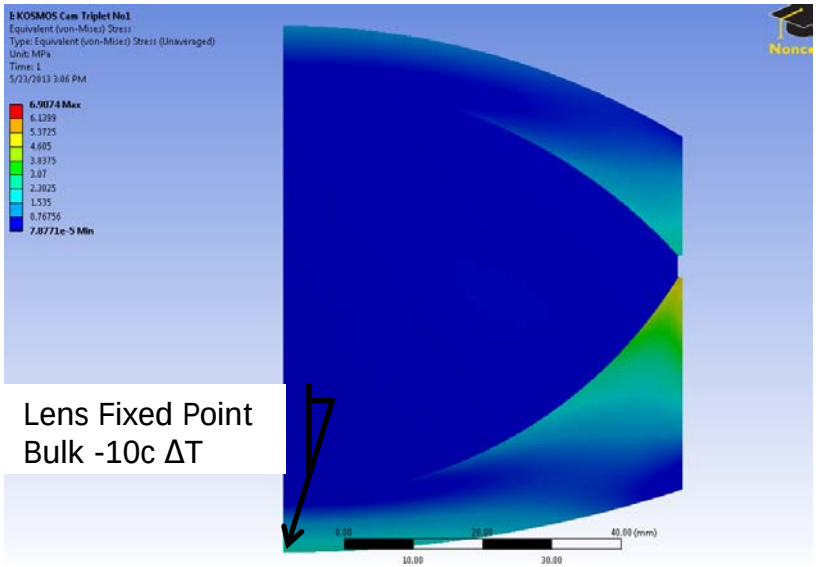


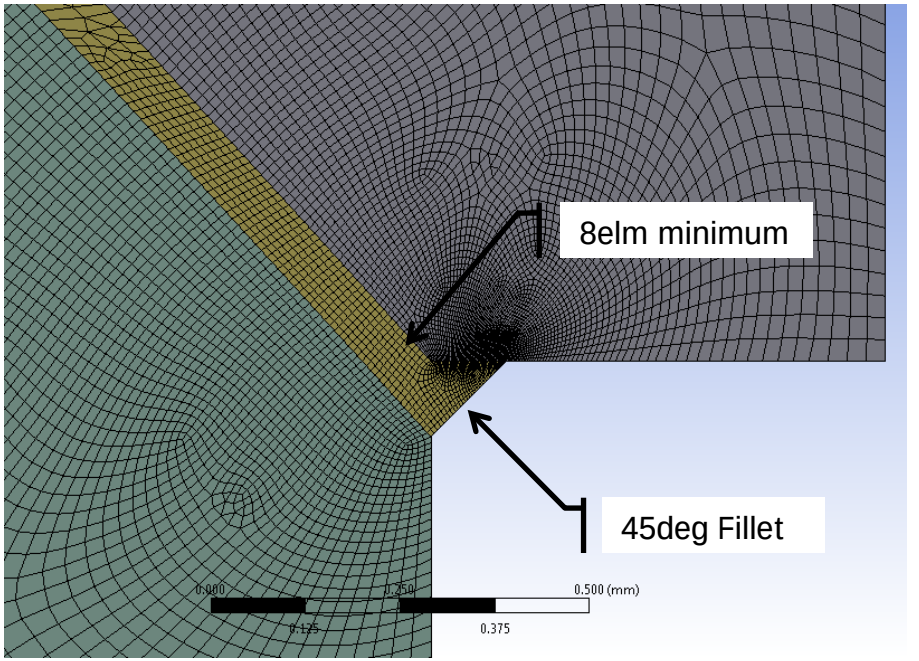


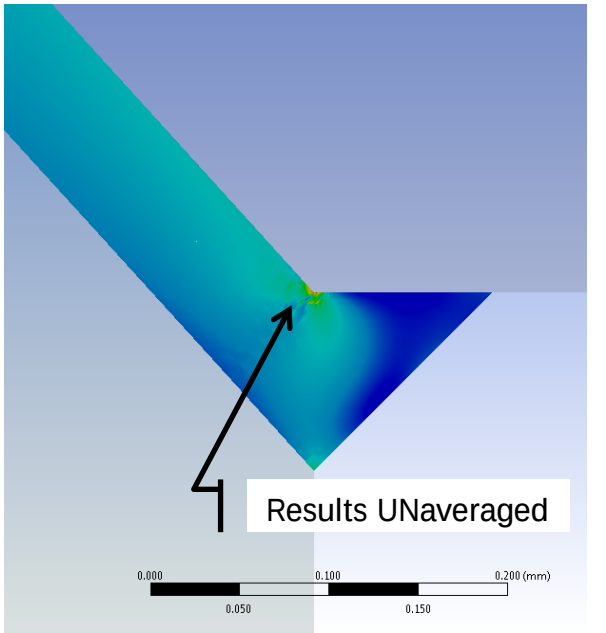

# Bond Stress

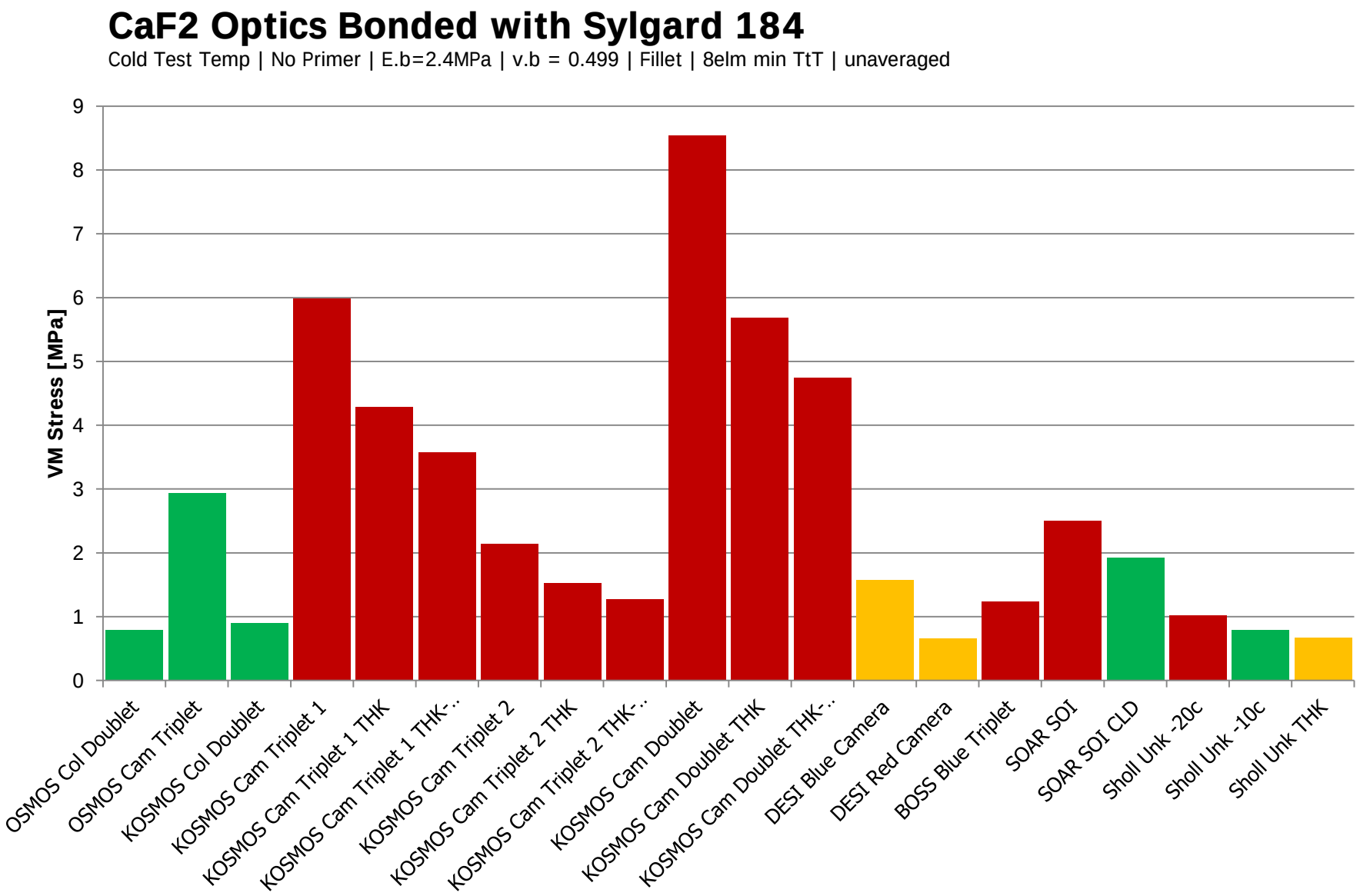
CaF2 Optics Bonded with Sylgard 184
Cold Test Temp | No Primer | E.b=2.4MPa | v.b = 0.499 | Fillet | 8elm min TtT | unaveraged
VM Stress [MPa]
0
1
2
3
4
5
6
7
8
9
OSMOS Col Doublet
OSMOS Cam Triplet
KOSMOS Col Doublet
KOSMOS Cam Triplet 1
KOSMOS Cam Triplet 1 THK
KOSMOS Cam Triplet 1 THK-..
KOSMOS Cam Triplet 2
KOSMOS Cam Triplet 2 THK
KOSMOS Cam Triplet 2 THK-..
KOSMOS Cam Doublet
KOSMOS Cam Doublet THK
KOSMOS Cam Doublet THK-..
DESI Blue Camera
DESI Red Camera
BOSS Blue Triplet
SOAR SOI
SOAR SOI CLD
Sholl Unk -20c
Sholl Unk -10c
Sholl Unk THK

# Bond Max Strain

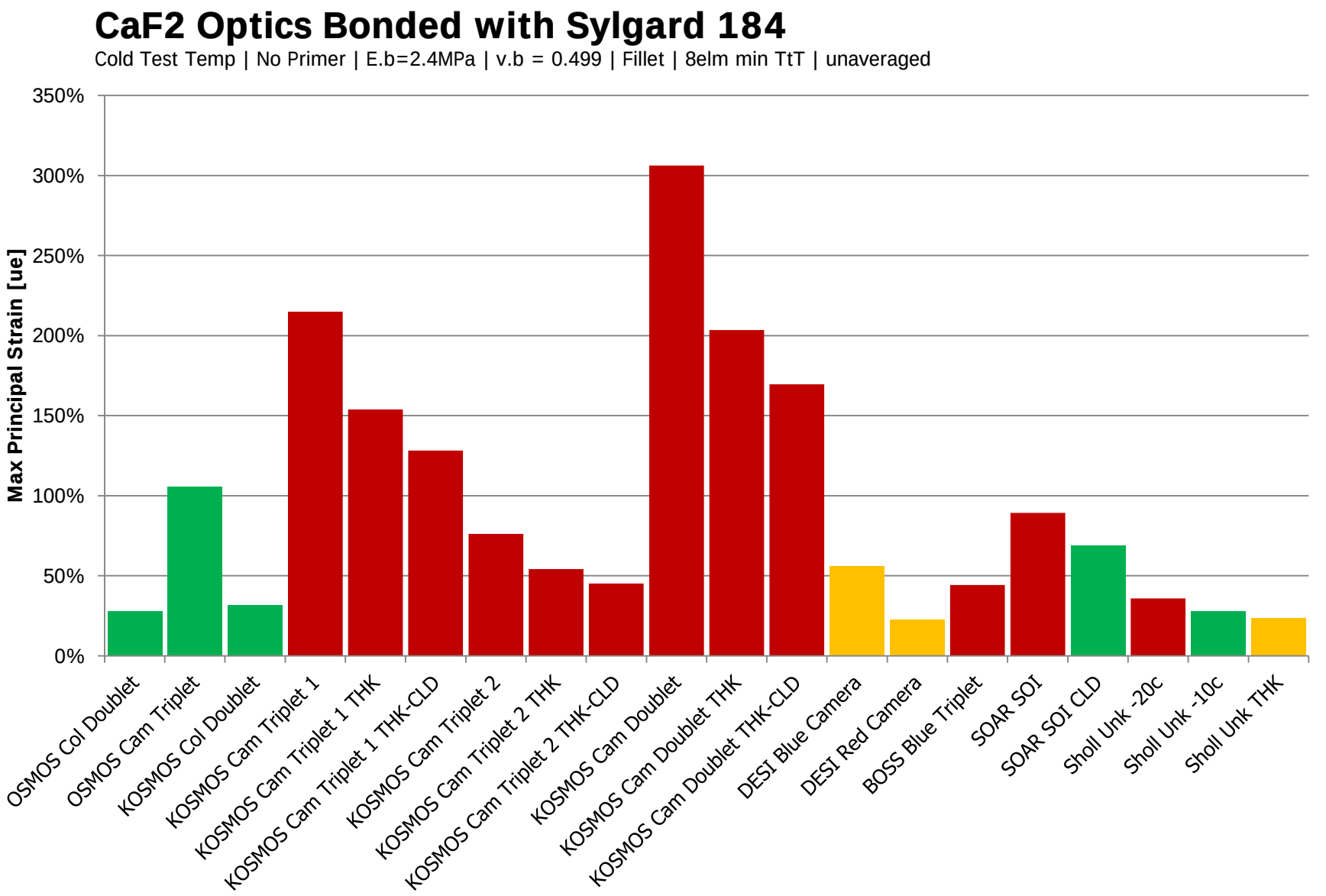

# Max/Min Peel Stresses

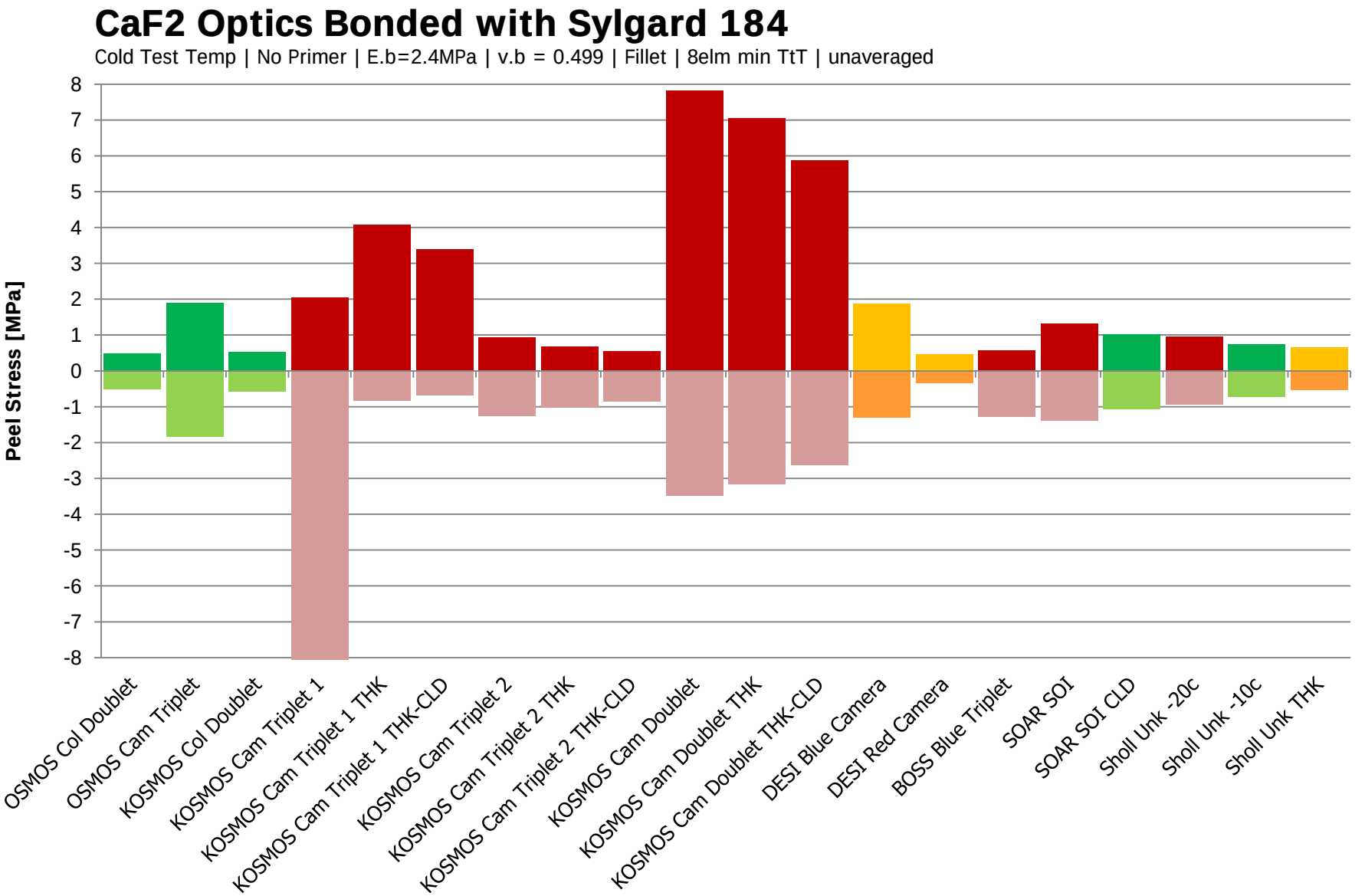

# Bond Strain Energy

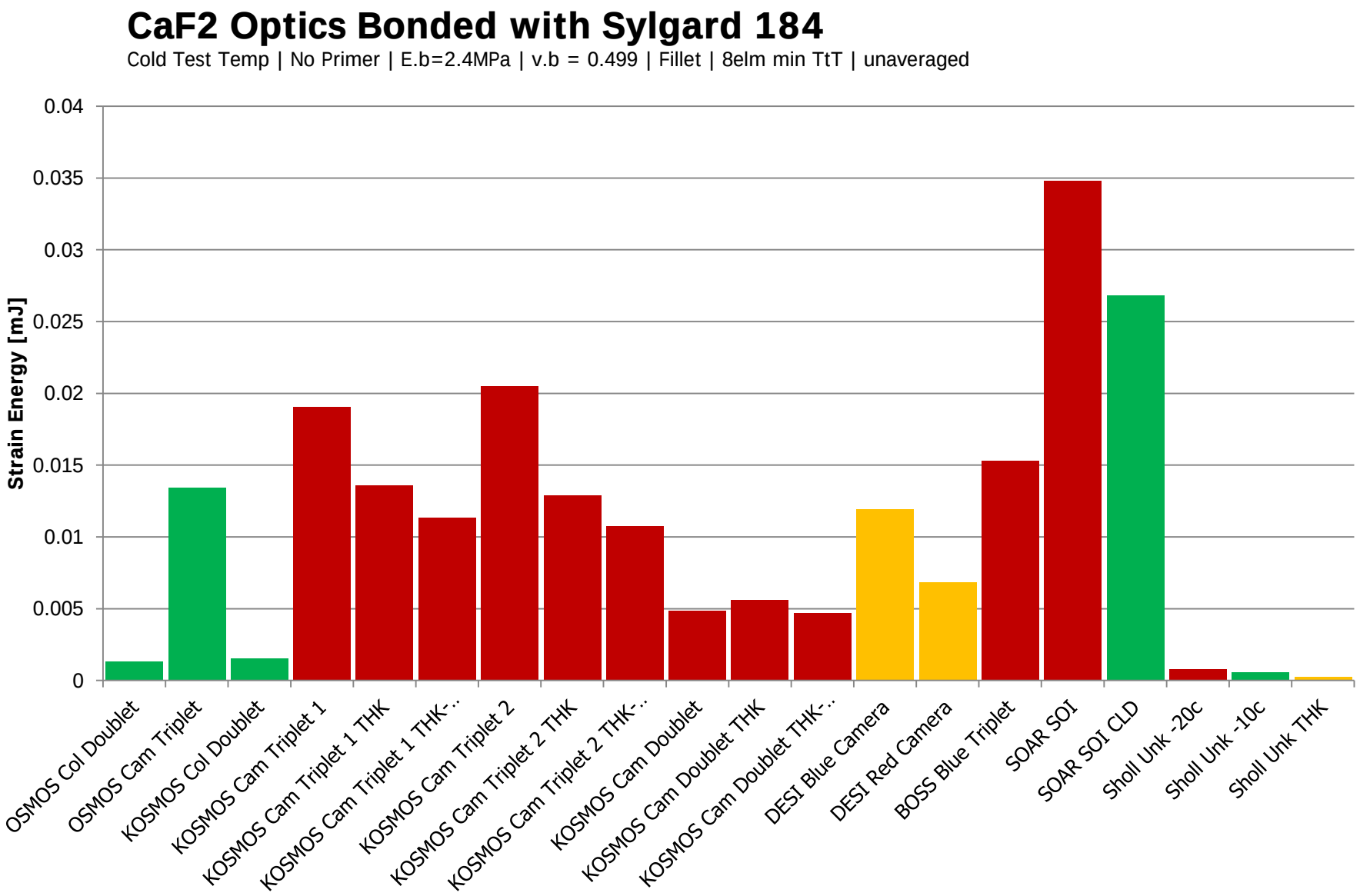

# ROC Geometry

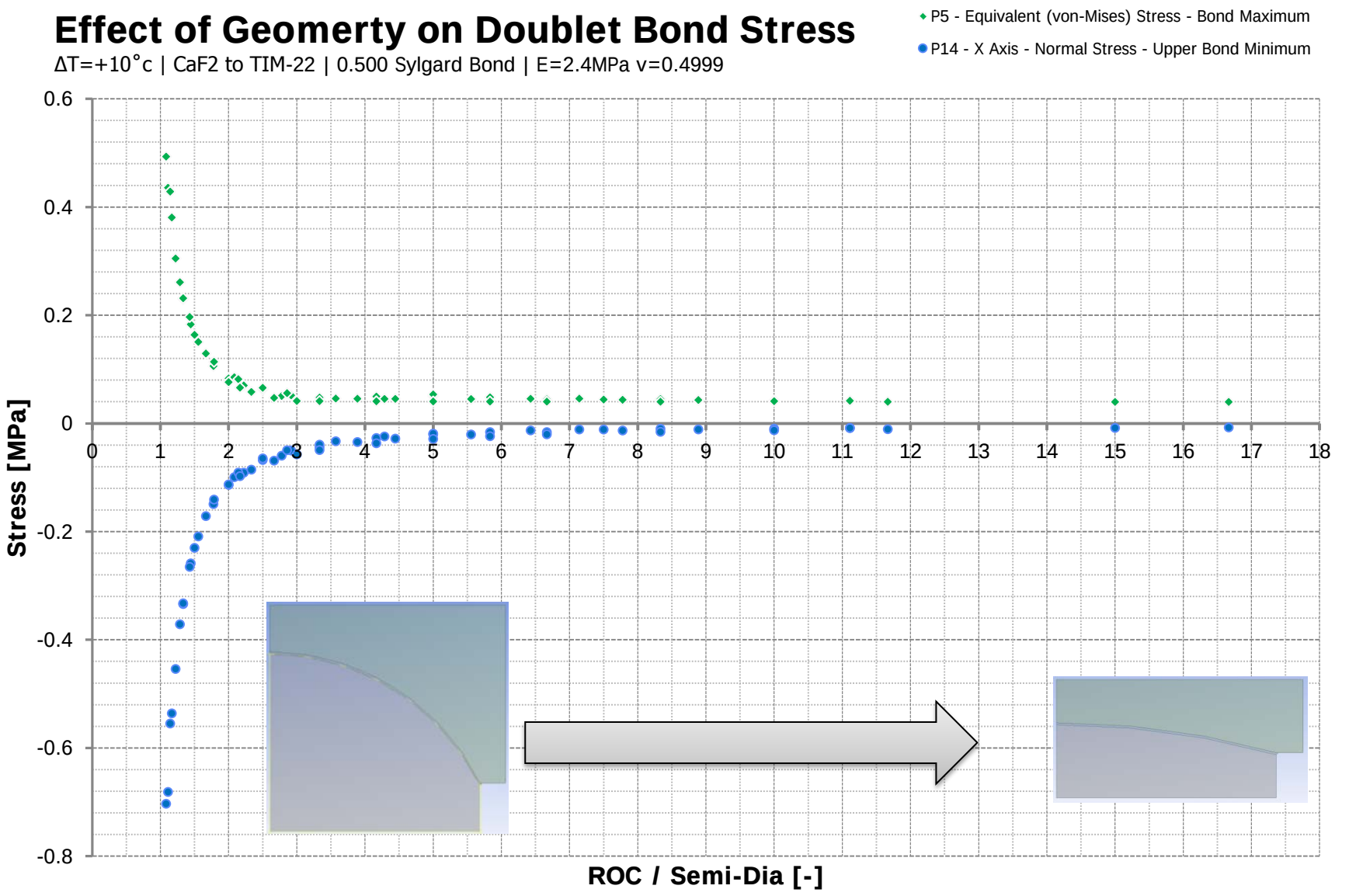

# Bond Thickness

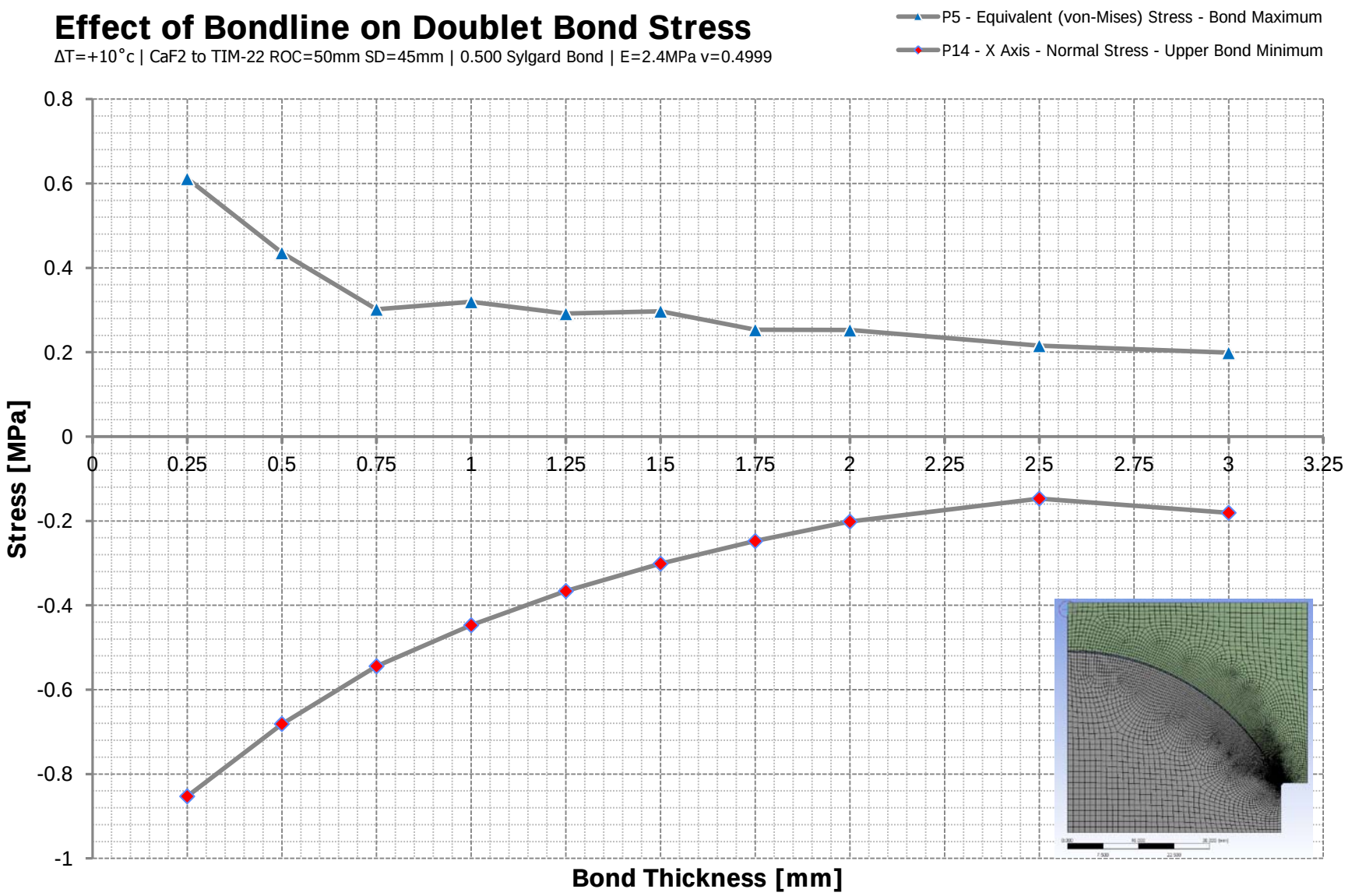
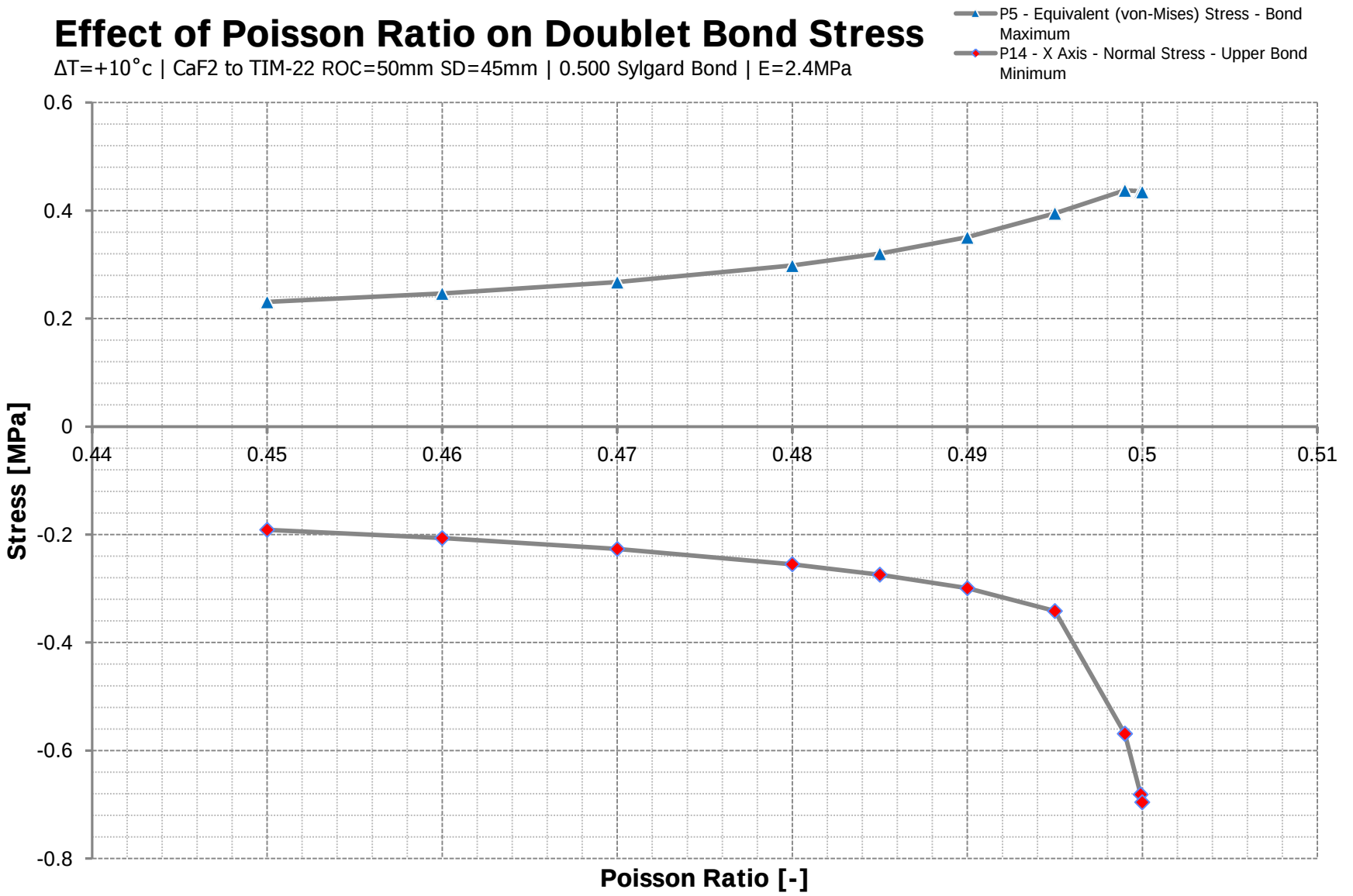
# Effect of Poisson Ratio